POLITECNICO DI MILANO
Dipartimento di Automazione
Corso di Laurea in Ingegneria dell'Automazione

Attitude control for a Quadrotor Helicopter

Thesis supervisors:
Prof. Marco Lovera.

Thesis written by: Qasim Muhammad
Matriculation number: 769171

Abstract

This thesis work focused on the study of a quadrotor helicopter. The dynamic system modeling and control of attitude of Quadrotor Helicopter carried out. To test the results, a simulator and a real platform were developed.

The Newton-Euler formalism was used to model the dynamic system. Particular attention was given to the group composed of the gearbox and the propeller which needed also the estimation of aerodynamic lift and torque to reach better accuracy.

PID control algorithms were compared. The first stage tests were performed on a simulated model where it was easy to evaluate the performance with a mathematical approach. The second stage tests were carried out on the quadrotor platform to evaluate the behavior of the real system.

A simulator based on Matlab-Simulink was developed. With this program it was possible to test the accuracy of the model and the robustness of the control algorithms. This made easier the testability and the observability of the system.

Acknowledgments

- I would like to thank my thesis supervisors, Prof. Marco Lovera for their insight and support throughout the duration of this thesis.

- Many thanks to my family for the patience and the support in all my choices, no matter what they were. In particular, I thank my brother Asif Nadeem for his company and understanding during this thesis activity.

- Last but not least, I would also like to thank my friends and fellow students For the great time spent together and the experiences shared.

Contents:

Abstract

Acknowledgments

Contents

Preface

1.Introduction

2.State of Art

3.Quadrotor model & system

3.1 Basic Concept

3.2 Newton Euler

4. Control Algorithm

4.1 Control model

4.2 PID technique

5.Quadrotor Simulator

5.1 System structure

5.2 Block Implementation.

6.Experimental Results

7.Conclusion

8.Appendix A Kinematics and Dynamics

A.1 Kinematics

A.2Dynamics

9. Appendix B Acronyms and abbreviations

10. Appendix C List of Constants

11.Referances

Preface

In this study, development and modeling of a quadrotor helicopter were performed. The main activities can be divided into four groups. The dynamic system modeling needed to be examined to understand the evolution of the forces in play. The control algorithm evaluation pointed out the stability and robustness using several control laws. The Matlab simulator was a good tool to test the correctness and the accuracy of the model and the control algorithms.

The motivation for the research in this thesis builds on the previous work discussed above in quadrotor research. While each of these systems provides an important component of the bigger picture (high tech research, usable commercial product, fun and inexpensive toy), none of them provide full systems engineering approach to the problem of usability in a combat theater. The research presented here is the first step towards a more complete understanding of the quadrotor as a dynamic system. Although much of the work presented has been completed or overcome before, working through it personally while keeping in mind the end goal of a troop usable system has uncovered problems not addressed in the previous endeavors. Relying on external sensing systems or complex controllers and disregarding flight time and platform weight may still result in a usable system, as is evident from the commercial and academic successes listed previously. But by tackling the problem with a fresh set of objectives, this thesis aims to correct those inadequacies and offer solutions and alternatives in response to the development and testing of a new platform. The whole system can be tested thanks to a Matlab-Simulink program, which is interfaced with the remote controller.

Myself, Qasim Muhammad carried out the project. Most of the studies were performed in the Dept. of Automation Engineering Politecnico di Milano, Italy. Many thanks to Prof. Marco Lovera for his advise throughout the whole project.

Qasim Muhammad.

Chapter 1

Introduction

This thesis work focuses on the study of a Vertical Take-Off and Landing (VTOL) Unmanned Aerial Vehicle (UAV). The proposed structure is a four-propeller helicopter called quadrotor.

In these last years, a growing interest has been shown in robotics. In fact, several industries (automotive, medical, manufacturing, space) require robots to replace men in dangerous, boring or onerous situations. A wide area of this research is dedicated to aerial platform.

Several structures and configurations have been developed to allow 3D movements. For example, there are blimps, fixed-wing planes, single rotor helicopters, bird-like prototypes, and quadrotors. Each of them has advantages and drawbacks. The Vertical Take-Off and Landing requirement of this project exclude some of the previous configuration. However the platforms, which show this characteristic, have unique ability for vertical, stationary and low speed flight. The quadrotor architecture has been chosen for this research for its low dimension, good maneuverability, simple mechanics and payload capability. As main drawback, the high-energy consumption can be mentioned. However, the trade-off results very positive.

This structure can be attractive in several applications, in particular for surveillance, imaging, dangerous environments, indoor navigation and mapping. The goals of this thesis are the system modeling, the control algorithm evaluation, the simulator design and the real platform development.

The study of the kinematics and dynamics helps to understand the physics of the quadrotor and its behavior. Together with the modeling, the determination of the control algorithm structure is very important to achieve a better stabilization. The whole system can be tested thanks to a Matlab-Simulink program that is interfaced with the remote controller.

According to the goals of this project, the research has been very detailed in both modeling and simulation. Thanks also to the identification process, the performance of the real platform has been satisfactory. The quadrotor tests shows roll and pitch errors always less than one degree. The yaw error has values less than two degrees under static condition and less than four degrees under dynamic tracking. The height stabilization has an error of just two centimeters.

To improve this quadrotor project, several modifications can be done. For example, a high level controller can be implemented to follow position requirements, obstacle avoidance and trajectory planning.

Chapter 2 gives an overview of the state of the art of the research area. Other related works are cited to show what has already been done in this field.

Chapter 3 provides the derivation of the quadrotor model. The dynamics is explained from the basic concepts to the Newton-Euler formalism. Particular attention is given to the motor-gears-propeller system and to the whole quadrotor architecture.

Chapter 4 focuses on the control algorithms needed to stabilize the quadrotor. The model of the helicopter is simplified to be able to use an easier controller and to lower the algorithm complexity. PID techniques are adopted in this work. The different phases of the control structure are presented.

Chapter 5 shows the quadrotor simulator. It is a Matlab-Simulink program used to verify the correctness of the helicopter dynamic model and to test the control algorithm performance. The system structure, block implementations are deepened to better explain the power of this tool.

Chapter 6 summarizes the goals of this thesis, evaluates the performance and the results of the project and proposes solutions to improve this quadrotor platform.

Chapter 7 Conclusion

Appendix A describes the basic equations that identify a 6 DOF rigid body with the Newton-Euler formulation.

Appendix B shows the linear regression method in which data are fitted with a straight line according to the ordinary least squares.

Appendix C lists all the constants used in this thesis with their symbols, units, values and descriptions.

Chapter 2

State of the art

In the last few years, the state of the art in Vertical Take-Off and Landing (VTOL) Unmanned Aerial Vehicle (UAV) has received several contributes. Moreover, most of the attention has been focused on, the quadrotor structure. Some projects are based on commercially available platforms like Draganflyer [1], X-UFO [2] and MD4-200 [3]. Other researchers prefer instead to build their own structure. A few examples are the helicopter, the X4-Flyer and the STARMAC.

Figure 1: Dragon flyer X8 from Dragonfly Innovations

There are articles that present hybrid configuration such as structure with non-symmetric rotation directions or with two directional rotors A few other works focus instead on modeling derivation and efficient configurations.

Even though there are a lot of different topics about the qudrotor structure, that one on which most of the publications have focused on is the control algorithm. It can be stated that the 85% of the articles propose a control low or compare the performance of few of them.

The most important techniques and the respective publications are now presented:

- The first control is done using Lyapunov Theory. According to this technique, it is possible to ensure, under certain condition, the asymptotical stability of the helicopter.

- The second control is provided by PD_2 feedback and PID structures .The strength of the PD_2 feedback is the exponential convergence property mainly due to the compensation of the Carioles and gyroscopic terms.

- The third control uses adaptive techniques. These methods provide good performance with parametric uncertainties and un modeled dynamics.

- The fourth control is based on Linear Quadratic Regulator (LQR). The main advantage of this technique is that the optimal input signal turns out to be obtainable from full state feedback.

- The fifth control is done with back stepping control. In the respective publications the convergence of the qudrotor internal states is guaranteed, but a lot of computation is required.

- The sixth control is provided by dynamic feedback. This technique is implemented in a few quadrotor projects to transform the closed loop part of the system into a linear, controllable and decoupled subsystem.

Other control algorithms are done with fuzzy techniques [30], neural networks and reinforcement learning.

The contribution of this thesis lies mainly in four fields:
• Accurate dynamic and aerodynamic modeling
• Easy and robust control structure
• Powerful and interactive simulator
• System identification and design of a real platform

Chapter 3

Quadrotor model & system

In this chapter, the derivation of the quadrotor model is provided. This result is very important because it describes how the helicopter moves according to its inputs. Thanks to these equations it is possible to define and predict the positions reached by the helicopter by investigating just the four motor speeds. The model equations will be ”inverted” in the next chapter (Control algorithms) to identify which inputs are needed to reach a certain position.

3.1 Basic concepts

The quadrotor is very well modeled with a four rotors in a cross configuration. This cross structure is quite thin and light, however it shows robustness by linking mechanically the motors (which are heavier than the structure). Each propeller is connected to the motor through the reduction gears. All the propellers axes of rotation are fixed and parallel. Furthermore, they have fixed-pitch blades and their air flows points downwards (to get an upward lift). These considerations point out that the structure is quite rigid and the only things that can vary are the propeller speeds.

In this section, neither the motors nor the reduction gears are fundamental because the movements are directly related just to the propellers velocities. The others parts will be taken into account in the following sections. Another neglected component is the electronic box. As in the previous case, the electronic box is not essential to understand how the quadrotor flies. It follows that the basic model to evaluate the quadrotor movements it is composed just of a thin cross structure with four propellers on its end.

The front and the rear propellers rotate counter-clockwise, while the left and the right ones turn clockwise. This configuration of opposite pairs directions removes the need for a tail rotor (needed instead in the standard helicopter structure). For Hovering all the propellers rotate at the same (hovering) speed $_H$ [rad s^{-1}] to counterbalance the acceleration due to gravity. Thus, the quadrotor performs stationary flight and no forces or torques move it from its position.

• Throttle (U_1 [N])

This command is provided by increasing (or decreasing) all the propeller speeds by the same amount. It leads to a vertical force WRT body-fixed frame that raises or lowers the quadrotor. If the helicopter is in horizontal position, the vertical direction of the inertial frame and that one of the body-fixed frame coincide. Otherwise the provided thrust generates both vertical and horizontal accelerations in the inertial frame.

• Roll (U_2 [N m])

This command is provided by increasing (or decreasing) the left propeller speed and by decreasing (or increasing) the right one. It leads to a torque with respect to the x_B axis, which makes the quadrotor turn. The overall vertical thrust is the same as in hovering hence this command leads only to roll angle acceleration.

• Pitch (U_3 [N m])

This command is very similar to the roll and is provided by increasing (or decreasing) the rear propeller speed and by decreasing (or increasing) the front one. It leads to a torque with respect to the y_B axis that makes the quadrotor turn. The overall vertical thrust is the same as in hovering hence this command leads only to pitch angle acceleration.

• Yaw (U_4 [N m])

This command is provided by increasing (or decreasing) the front-rear propellers' speed and by decreasing (or increasing) that of the left-right couple. It leads to a torque with respect to the z_B axis that makes the quadrotor turn. The yaw movement is generated thanks to the fact that the left-right propellers rotate clockwise while the front-rear ones rotate counterclockwise. Hence, when the overall torque is unbalanced, the Helicopter turns on itself around z_B. The total vertical thrust is the same as in hovering hence this command leads only to yaw angle acceleration

FIGURE 2: Quadrotor differential thrust example

3.2 Newton-Euler model

This section provides the specific model information of the quadrotor architecture starting from the generic 6 DOF rigid-body equation derived with the Newton-Euler formalism in appendix A.

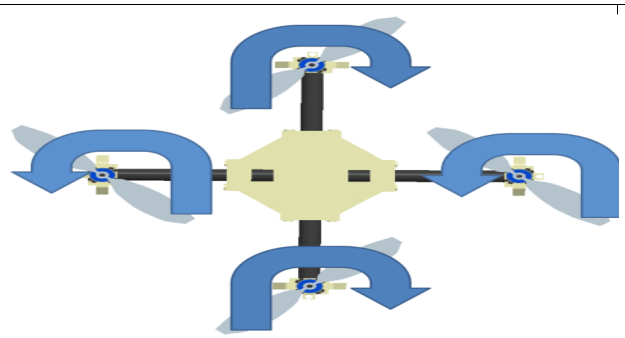	HOVER / ALTITUDE CHANGE When all actuators are at equal thrust, the craft will either hold in steady hover (assuming no disturbance) or increase/decrease altitude depending on actual thrust value.
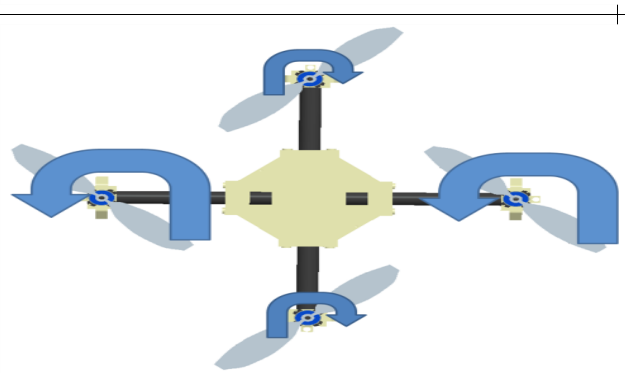	YAW RIGHT If the CW spinning actuators are decreased (or the CCW actuators increased), a net torque will be induced on the craft resulting in a yaw angle change. In this instance, a CW torque is induced.
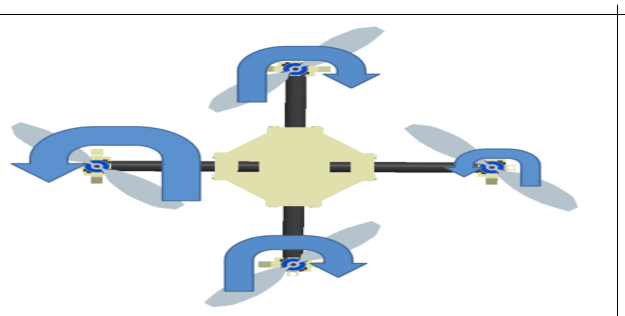	ROLL RIGHT If one of the actuators is decreased or increased on the roll axis as compared to the other actuator on the same axis, a roll motion will occur. In this instance, the craft would roll towards the right.
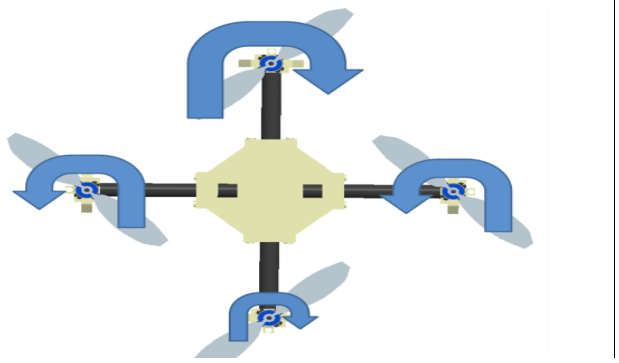	PITCH UP Similar to the roll axis, if either actuator is changed on the pitch axis, the axis will rotate in the direction of the smaller thrust. In this instance, the craft nose would pitch up towards the reader (out of the page) due to the differential on the pitch

Two frames have to be defined:

- The earth inertial frame (E-frame)
- The body-fixed frame (B-frame)

The equations of motion are more conveniently formulated in the body-fixed frame because of the following reasons:

- The inertia matrix is time-invariant.
- Advantage of body symmetry can be taken to simplify the equations.
- Measurements taken on-board are easily converted to body-fixed frame.
- Control forces are almost always given in body-fixed frame.

Equation (3.1) describes the kinematics of a generic 6 DOF rigid-body.

$$\dot{\xi} = j_{\Theta}\nu \qquad (3.1)$$

ξ [+] is composed of the quadrotor linear Γ_E [m] and angular Θ_E [rad] position vectors WRT E-frame as shown in equation (3.2).

$$\xi = [\,X \;\; Y \;\; Z \;\; \emptyset \;\; \theta \;\; \psi]^T \qquad (3.2)$$

Similarly, ν [+] is composed of the quadrotor linear V_B [m s^{-1}] and angular ω^b [rad s^{-1}] velocity vectors WRT B-frame as shown in equation (3.3).

$$\nu \;\; = [u \;\; v \;\; w \;\; p \; q \;\; r \;\;]^T \qquad (3.3)$$

While the rotation R_{Θ} [−] and the transfer T_{Θ} [−] matrices are defined

$$J_{\Theta} = \begin{bmatrix} R_{\Theta} & 0_{3x3} \\ 0_{3x3} & T_{\Theta} \end{bmatrix} \qquad (3.4)$$

$$R_{\Theta} = \begin{bmatrix} c_{\psi}c_{\theta} & -s_{\psi}c_{\phi} + c_{\psi}s_{\theta}s_{\phi} & s_{\psi}s_{\phi} + c_{\psi}s_{\theta}c_{\phi} \\ s_{\psi}\,c_{\theta} & c_{\psi}c_{\phi} + s_{\psi}s_{\theta}s_{\phi} & -c_{\psi}s_{\phi} + s_{\psi}s_{\theta}c_{\phi} \\ -s_{\theta} & c_{\psi}s_{\phi} & c_{\theta}c_{\phi} \end{bmatrix} \qquad (3.5)$$

$$T_\Theta = \begin{bmatrix} 1 & s_\phi t_\theta & c_\phi t_\theta \\ 0 & c_\phi & -s_\phi \\ 0 & {s_\phi}/{c_\theta} & {c_\phi}/{c_\theta} \end{bmatrix} \qquad (3.6)$$

Two assumptions have been done in this approach:

• The first one states that the origin of the body-fixed frame o_B is coincident with the center of mass (COM) of the body. Otherwise, another point (COM) should have been taken into account and it would have considerably complicated the body equations.

• The second one specifies that the axes of the B-frame coincide with the body principal axes of inertia. In this case the inertia matrix I is diagonal and, once again, the body equations become easier.

A generalized force vector Λ can be defined according to equation (3.7).

$$\Lambda = [\ F_x \quad F_y \quad F_z \quad \tau_x \quad \tau_y \quad \tau_z]^T \qquad (3.7)$$

Hence the last vector contains specific information about its dynamics. Λ Can be divided in three components according to the nature of the quadrotor contributions.

The first contribution is the gravitational vector $G_B(\xi)$ [+] given from the acceleration due to gravity g [m s−2]. It's easy to understand that it affects just the linear and not the angular equations since it's a force and not a torque.

The second contribution takes into account the gyroscopic effects produced by the propeller rotation. Since two of them are rotating clockwise and the other two counterclockwise, there is a overall imbalance when the algebraic sum of the rotor speeds is not equal to zero. If, in addition, the roll or pitch rates are also different than zero, the

quadrotor experiences a gyroscopic torque. Equation (3.8) defines the overall propellers' speed [rad s^{-1}] and the propellers' speed vector [rad s^{-1}]

$$\Omega = -\Omega_1 + \Omega_2 - \Omega_3 + \Omega_4 \qquad \Omega = \begin{bmatrix} \Omega 1 \\ \Omega 2 \\ \Omega 3 \\ \Omega 4 \end{bmatrix} \tag{3.8}$$

Where Ω_1 [rad s^{-1}] is the front propeller speed, Ω_2 [rad s^{-1}] is the right propeller speed, Ω_3 [rad s^{-1}] is the rear propeller speed. Ω_4 [rad s^{-1}] is the left propeller speed.

The third contribution takes into account the forces and torques directly produced by the main movement inputs. It is possible to describe the quadrotor dynamics considering these last three contributions according to equation (3.9).

$$M_B\, \dot{\mathcal{V}} + C_B(\nu)\, \nu = G_B(\xi) + O_B(\nu) + E_B\, \Omega^2 \tag{3.9}$$

By rearranging equation (3.8) it is possible to isolate the derivate of the generalized velocity vector WRT B-frame $\dot{\nu}$.

$$\dot{\nu} = M_B^{-1}(- C_B(\nu)\, \nu + G_B(\xi) + O_B(\nu)\, \Omega + E_B\, \Omega^2) \tag{3.10}$$

Equation (3.9) shows the previous expression not in a matrix form, but in a system of equations.

$$\begin{cases} \dot{u} = (v\,r - w\,q) + g s_\vartheta \\ \dot{v} = (w\,p - u\,r) - g c_\vartheta\, s_\phi \\ \dot{w} = (uq - vp) - g c_\vartheta s_\phi + \dfrac{U_1}{m} \\ \dot{p} = \dfrac{I_{YY} - I_{zz}}{I_{xx}} qr - \dfrac{J_{TP}}{I_{xx}} q\Omega + \dfrac{U_2}{I_{xx}} \\ \dot{q} = \dfrac{I_{zz} - I_{xx}}{I_{yy}} pr + \dfrac{J_{TP}}{I_{yy}} p\Omega + \dfrac{U_3}{I_{yy}} \\ \dot{r} = \dfrac{I_{xx} - I_{yy}}{I_{zz}} pq + + \dfrac{U_4}{I_{zz}} \end{cases} \tag{3.11}$$

Where the propellers' speed inputs are given through equation (3.12)

$$\begin{cases} U_1 = b({\Omega_1}^2 + {\Omega_2}^2 + {\Omega_3}^2 + {\Omega_4}^2) \\ U_2 = bl(-{\Omega_2}^2 + {\Omega_4}^2) \\ U_3 = bl(-{\Omega_1}^2 + {\Omega_3}^2) \\ U_4 = d\left(-{\Omega_1}^2 + {\Omega_2}^2 - {\Omega_3}^2 + {\Omega_4}^2\right) \\ \Omega = -\Omega_1 + \Omega_2 - \Omega_3 + \Omega_4 \end{cases} \tag{3.12}$$

The quadrotor dynamic system in equation (3.11) is written in the body fixed frame. As stated before, this reference is widely used in 6 DOF rigid body equations. However in this case it can be useful to express the dynamics with respect to a hybrid system composed of linear equations WRT **E**-frame and angular equations WTR **B**-frame. Therefore the following equations will be expressed in the new "hybrid" frame called **H**-frame. This new reference is adopted because it's easy to express the dynamics combined with the control (in particular for the vertical position in the earth inertial frame).Equation (3.13) shows the quadrotor generalized velocity vector WRT H-frame.

$$\xi = [\dot{\Gamma^E} \quad w^B]^T = [\dot{X} \quad \dot{Y} \quad \dot{Z} \quad p \quad q \quad r]^T \tag{3.13}$$

The goal of the quadrotor stabilization is to find those values of the motor's voltage, which maintains the helicopter in a certain position required in the task. This process is also known as inverse kinematics and inverse dynamics. Unlike the direct ones, the inverses operations are not always possible and not always unique. For these reasons their consideration is much more complicated.

- The goal of the quadrotor stabilization is to find those values of the motor's voltage, which maintains the helicopter in a certain position required in the task. This process is also known as inverse kinematics and inverse dynamics. Unlike the direct ones, the inverses operations are not always possible and not always unique. For these reasons their consideration is much more complicated. The whole control algorithm is used to give the right signals to the propellers. Since they are four, no more than four variables can be controlled in the loop. From the

Beginning of the project, it has been decided to stabilize attitude (Euler angles) and height. According to this choice, the equations, which describe the X and Y position, have been deleted.

Equation (3.14) shows the quadrotor dynamics used in the control.

$$\begin{cases} \ddot{Z} = -g + (cos\vartheta cos\phi)\frac{U_1}{m} \\ \ddot{\phi} = \frac{U_2}{I_{xx}} \\ \ddot{\vartheta} = \frac{U_3}{I_{yy}} \\ \ddot{\psi} = \frac{U_4}{I_{zz}} \end{cases} \tag{3.14}$$

The control algorithm receives, as inputs, the data from the sensors and from the task. During the computation it uses a lot of constants and variables, which describe the dynamics and the quadrotor states. The output of the algorithm is the code, which determine the PWM signal of the four motors.

Chapter 4

Control algorithms

The control algorithms tested in this work are presented in this chapter. The first stage tests were performed on the Matlab simulated model where it was easy to evaluate the performance with a mathematical approach. The second stage tests were carried out on the quadrotor platform to evaluate the behavior of the real system. This chapter is strictly connected with the previous one (3), because it analyzes the quadrotor model and tries to ”invert” it to reach a certain attitude and height.

The first section (4.1: Control modeling) shows the basic quadrotor model simplifications. These must be done to be able to use an easier controller and to lower the algorithm complexity. In addition, thanks to the parameters determined (Identification of the constants), further reductions were possible in the control chain.

The second section (4.2: PID techniques) introduces the PID theory and its strengths. After that it shows and explains in detail the four inner control diagrams. Their goal is to determine the basic movement signals from attitude and height data (sensors) and from task references (remote controller). According to the controlled variable, an enhanced PID structure has been implemented.

4.1 Control modeling

The dynamics of the quadrotor is well described in the previous chapter. However the most important concepts can be summarized in equations (4.1), (4.2) and (4.3). The first one shows how the quadrotor accelerates according to the basic movement commands given.

$$
\begin{cases}
\ddot{X} = (\sin\psi\sin\phi \ + \ \cos\psi \ \sin\theta\cos\phi) \, {}^{U_1}/_{m} \\
\ddot{Y} = (-\cos\psi\sin\phi \ + \ \sin\psi \ \sin\theta\cos\phi \ ) \, {}^{U_1}/_{m} \\
\ddot{Z} = -g + (\cos\theta\cos\phi) \, {}^{U_1}/_{m} \\
\dot{p} = \frac{\mathrm{Iyy-Izz}}{\mathrm{Ixx}} qr - \frac{\mathrm{J_{TP}}}{\mathrm{Ixx}} q\Omega \ + \frac{\mathrm{U_2}}{\mathrm{Ixx}} \\
\dot{q} = \ \frac{\mathrm{Izz-Ixx}}{\mathrm{Iyy}} pr - \frac{\mathrm{J_{TP}}}{\mathrm{Iyy}} p\Omega \ + \frac{\mathrm{U_3}}{\mathrm{Iyy}} \\
\dot{r} = \frac{\mathrm{Ixx-Iyy}}{\mathrm{Izz}} pq + \frac{\mathrm{U_4}}{\mathrm{Izz}}
\end{cases}
\tag{4.1}
$$

The second system of equations explains how the basic movements are related to the propellers' squared speed.

$$
\begin{cases}
U_1 = b({\Omega_1}^2 + \ {\Omega_2}^2 + \ {\Omega_3}^2 + \ {\Omega_4}^2) \\
U_2 = bl(-{\Omega_2}^2 + \ {\Omega_4}^2) \\
U_3 = bl(-{\Omega_1}^2 + \ {\Omega_3}^2) \\
U_4 = d\left(-{\Omega_1}^2 \ + \ {\Omega_2}^2 - \ {\Omega_3}^2 + \ {\Omega_4}^2\right) \\
\Omega = -\Omega_1 + \Omega_2 - \Omega_3 + \Omega_4
\end{cases}
\tag{4.2}
$$

The goal of the quadrotor stabilization is to find those values of the motor's voltage, which maintains the helicopter in a certain position required in the task. This process is also known as inverse kinematics and inverse dynamics. Unlike the direct ones, the inverses operations are not always possible and not always unique. For these reasons their consideration is much more complicated.

The whole control algorithm is used to give the right signals to the propellers. Since they are four, no more than four variables can be controlled in the loop. From the beginning of the project, it has been decided to stabilize attitude (Euler angles) and height. According to this choice, the equations, which describe the X and Y position, have been deleted.

$$
\begin{cases}
\ddot{Z} = -g + (cos\vartheta cos\phi)\dfrac{U_1}{m} \\
\ddot{\phi} = \dfrac{U_2}{I_{xx}} \\
\ddot{\vartheta} = \dfrac{U_3}{I_{yy}} \\
\ddot{\psi} = \dfrac{U_4}{I_{zz}}
\end{cases}
\tag{4.3}
$$

The control algorithm receives, as inputs, the data from the sensors and from the task. During the computation it uses a lot of constants and variables, which describe the dynamics and the quadrotor states. The output of the algorithm is the code, which determine the PWM signal of the four motors. The controller can be divided in four components according to figure .

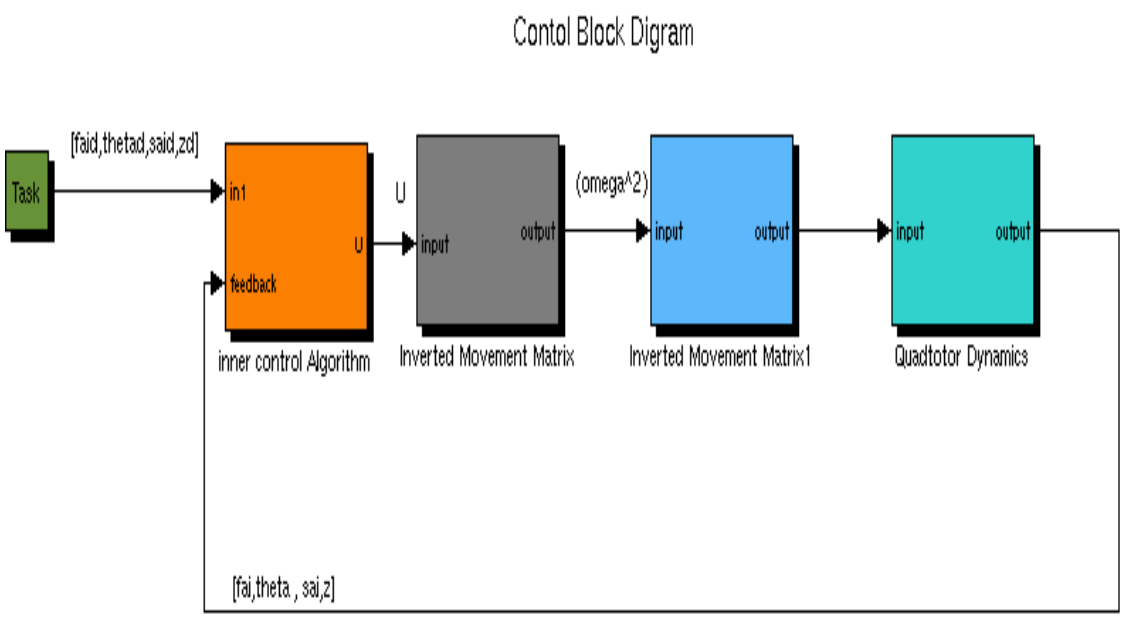

INNER CONTROL ALGORITHMS" represents the core of the control algorithms. It processes the task and the sensors data and provides a signal for each basic movement, which balances the position error. Equation (4.4) is used in this block to transfer an acceleration command to a basic movement one. The control rules used to estimate the acceleration commands are PID techniques. The implementation of this block will be explained with better accuracy in the next section.

"INVERTED MOVEMENTS MATRIX" is the second block in the control chain. It is used to compute the propellers' squared speed from the four basic movement signals. Since the determinant of the movement matrix is different than zero, it can be inverted to find the relation U to Ω^2. The block computation is shown in equation (4.4) is

$$
\begin{aligned}
{\Omega_1}^2 &= \frac{1}{4b}U1 - \frac{1}{2bl}U3 - \frac{1}{4d}U4 \\
{\Omega_2}^2 &= \frac{1}{4b}U1 - \frac{1}{2bl}U2 + \frac{1}{4d}U4 \\
{\Omega_3}^2 &= \frac{1}{4b}U1 + \frac{1}{2bl}U3 - \frac{1}{4d}U4 \\
{\Omega_4}^2 &= \frac{1}{4b}U1 + \frac{1}{2bl}U2 + \frac{1}{4d}U4
\end{aligned}
$$

4.2 PID techniques

In the industrial area the most used liner regulators are surely the PID. The reasons of this success are mainly three:

• Simple structure,

• Good performance for several processes,

• Tunable even without a specific model of the controlled system .

In robotics, PID technique represents the basics of control. Even though a lot of different algorithms provide better performance than PID, this last structure is often chosen for the reasons expressed above.

The traditional PID structure is composed of the addition of three contributes, as shown in figure 4.2 and equation (4.5).

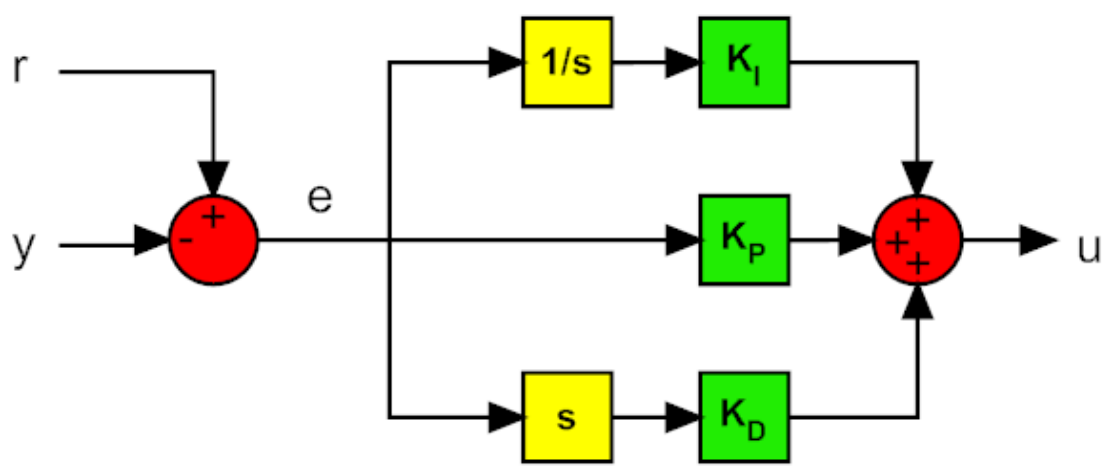

The blocks ”1/s” and ”s” represents the integration and derivation operations.

$$U(t)=Kp\ e(t) + Ki\int_0^t e(\tau)\,dt + Kz.\ de(t)/dt$$

The first contribute (P) is proportional to the error and define the proportional bandwidth. Inside this interval the output will be proportional to the error while outside the output will be minimum or maximum. The second contribute (I) varies according to the integral of the error. Even though this component increases the overshoot and the settling time, it has a unique propriety: it eliminates the steady state error. The third contribute (D) varies according to the derivate of the error. This component help to decrease the overshoot and the settling time .

In the Laplace domain, the traditional PID structure can be rewritten according to equation (4.6).

$$u(s) = \left(K_p + \frac{K_I}{s} + sK_D\right)e(s) \qquad (4.6)$$

The description of the four inner control algorithms for the height and attitude stabilization is now presented.

- ROLL CONTROL:

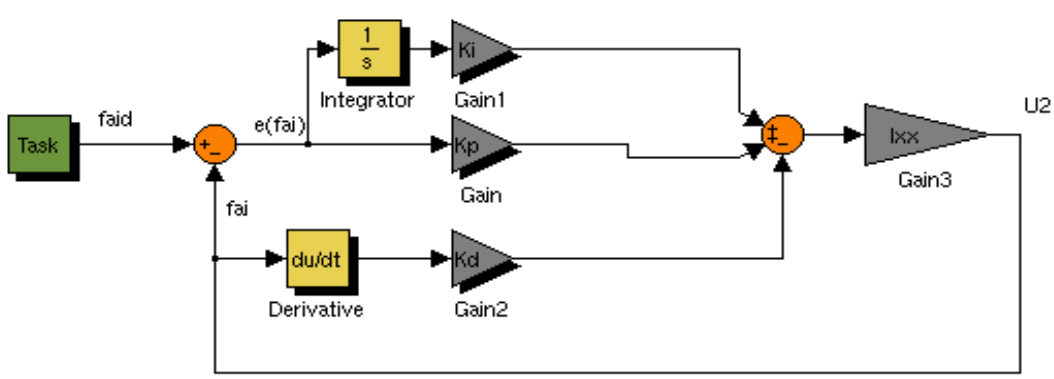

Block Digram of the Roll Control

ϕ_d [rad] represents the desired roll angle, ϕ [rad] is the measured roll angle, $e\phi$ [rad] is the roll error and U_2 [N m] is the required roll torque. $K_P\phi$ [s^{-2}], $K_I\phi$ [s^{-3}] and $K_D\phi$ [s^{-1}] are the three control parameters. At last I_{XX} [N m] is the body moment of inertia around the x-axis. It can be noted that the roll stabilization has a structure very close to that one explained before. The only difference is that there is the block "I_{XX}" after the sum of the three main components. This contribute comes from equation (4.3) and is necessary to relate the roll control to U_2.

- PITCH CONTROL:

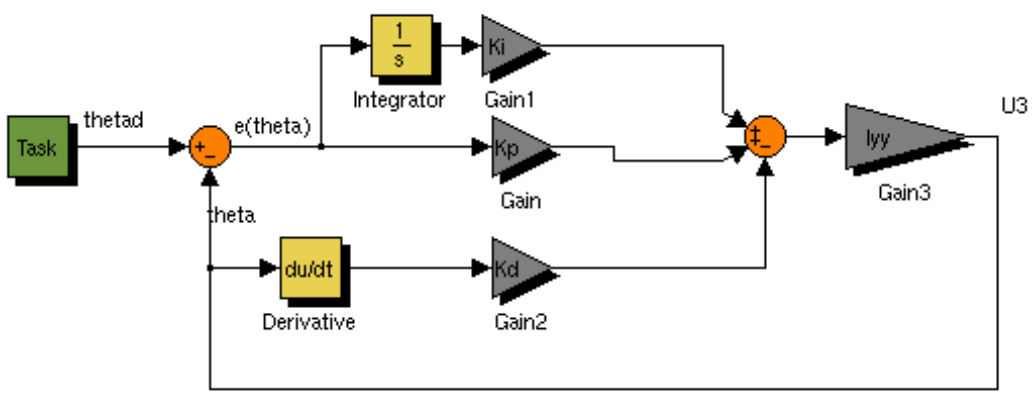

Block Digram of the Pitch Control

θ_d [rad] represents the desired pitch angle, _ [rad] is the measured pitch angle, $e\theta$ [rad] is the pitch error and U_3 [N m] is the required pitch torque.$K_P\theta$ [s^{-2}], $K_I\theta$ [s^{-3}] and $K_D\theta$ [s^{-1}] are the three control parameters. At last I_{YY} [N m] is the body moment of inertia around the y-axis. It is easy to see that the pitch stabilization has a structure very close to the roll one. The only difference is that the roll acts around the x-axis while the pitch acts around the y-axis, according to equation (4.3).

- YAW CONTROL:

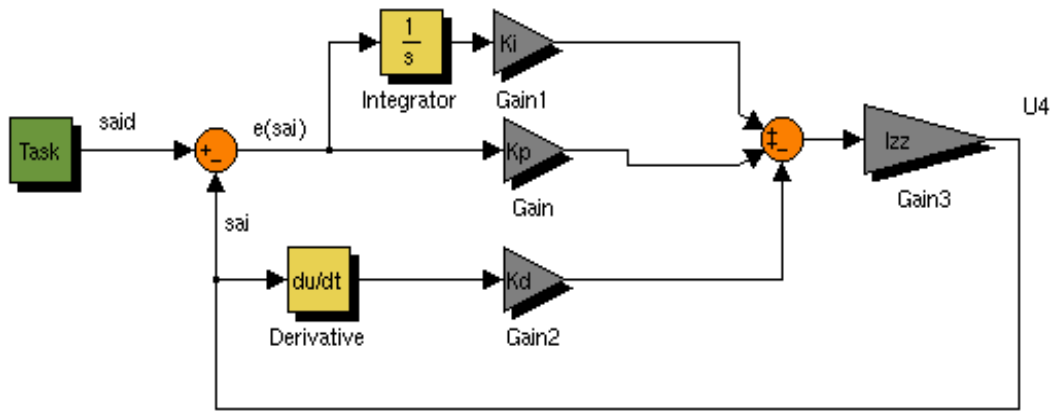

Block Digram of the Yaw Control

ψ_d [rad s^{-1}] represents the desired yaw angle velocity, ψ_d [rad] represent the desired yaw angle, ψ [rad] is the measured yaw angle, $e\psi$ [rad] is the yaw error and U_4 [N m] is the required yaw torque. $K_P\psi$ [s^{-2}], $K_I\psi$ [s^{-3}] and $K_D\psi$ [s^{-1}] are the three control parameters. At last I_{ZZ} [N m] is the body moment of inertia around the z-axis. The "I_{ZZ}" block is needed to relate the yaw control to U_4, according to equation (4.3).

- HEIGHT CONTROL:

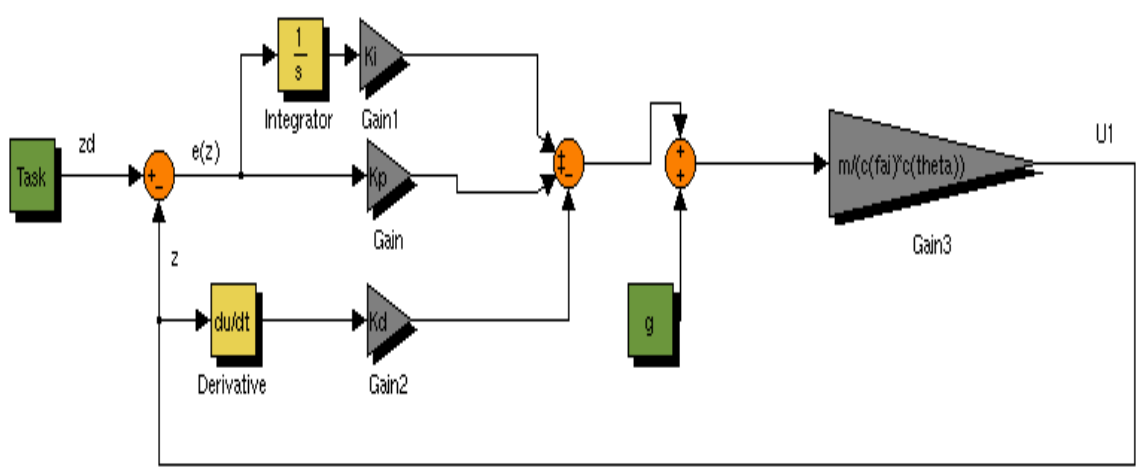

Block Digram of the Height Control

z_d [m] represents the desired height, z_{IR} [m] is the height measured by the IR module, z_{SONAR} [m] is the height measured by the SONAR module, z [m] is the height estimated from the sensors, e_z [m] is the height error and U_1 [N] is the required thrust. K_{Pz} [s^{-2}], K_{Iz} [s^{-3}] and K_{Dz} [s^{-1}] are the three control parameters. At last g [m s^{-2}] is the acceleration due to gravity, m [kg] is the mass of the quadrotor, $c\phi$ [−] is the roll angle cosine and $c\,\theta$ [−] is the pitch angle cosine.

According to equation (4.3) the height dynamics is more complex than the other three. In fact, it also depends from the roll and pitch angles. Furthermore the acceleration due to gravity must be compensated. The quadrotor mass (m) has the same role as the moments of inertia in the angular case.

Chapter 5

Quadrotor simulator

Here the quadrotor simulator is presented. This tool is very helpful to verify the correctness of the helicopter dynamic model and to test the control algorithms performance. Furthermore, thanks to a real-time interface with the remote controller, it is possible to evaluate the behavior of the quadrotor through a 3D view. This simulator has been developed with the Matlab tool Simulink.

The first section (5.1: System structure) introduces the simulation tools Matlab and Simulink. Furthermore it provides an overview of the quadrotor system architecture and it gives a brief description of blocks and commands.

The second section (5.2: Blocks implementation) shows the implementation of the previously introduced blocks. Particular attention is given to the model of the dynamics, the quantization (in both time and frequency) of the sensors signals, and the interface of the inputs and the portability of the control algorithm.

5.1 System structure

Matlab is a high-level technical computing language and interactive environment for algorithm development, data visualization, data analysis and numeric computation. It is widely used in engineering and science because of its easy interface and powerful commands.

The main strengths of Matlab are:

• Is relatively easy to learn.

• Optimized code to be relatively quick when performing matrix operations.

• May behave like a calculator or as a programming language.

• Is an interpreted language, errors are easier to fix.

Matlab main weakness is instead its slowness: it is almost always much slower than a compiled language such as C.

Simulink is an environment for multi domain simulation and Model-Based Design for dynamic and embedded systems. It provides an interactive graphical environment and a customizable set of block libraries, which allow designing, simulating, implementing, and testing a variety of time-varying systems. Simulink has been chosen in this work for its easy and clear graphic interface.

The model of the whole system is composed of several interconnected blocks in a classic feedback structure. ”Dynamics” represents the physics of the quadrotor and provides the position, velocity and acceleration of both linear and angular quantities. The actuators dynamic is also modeled in this block.

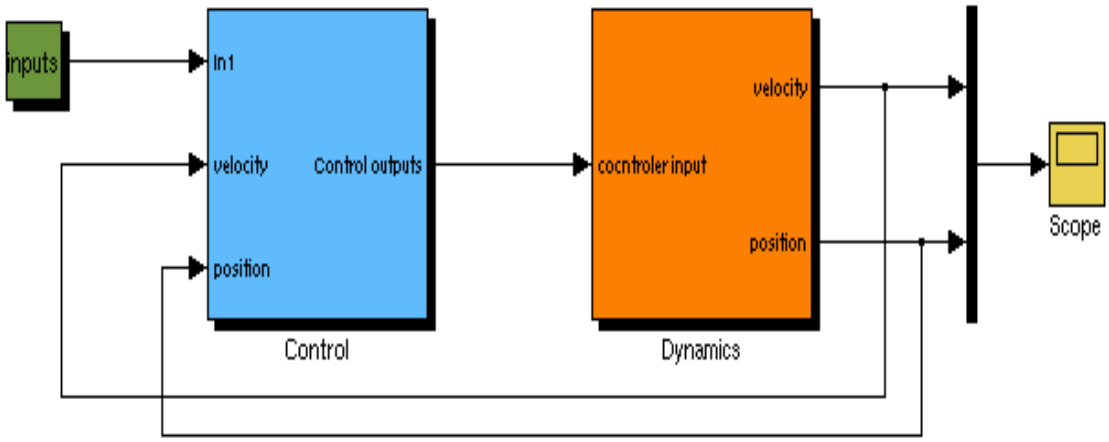

System Structure

5.2 Blocks implementation

”Dynamics” represents the physics of the quadrotor and provides the position, velocity and acceleration of both linear and angular quantities. Figure () shows a snapshot of the ”dynamics” implementation in Simulink.

Attitude Control Of Quadrotor Helicopter

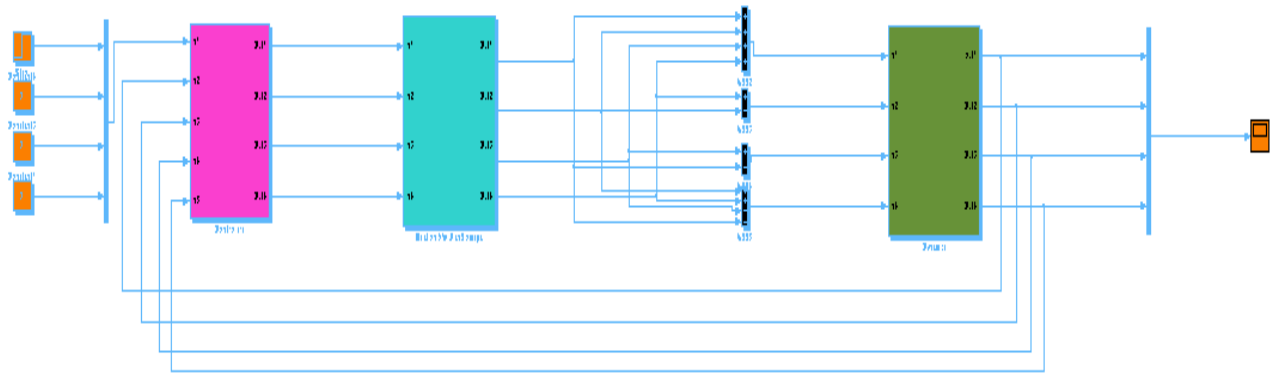

This block (as most of the following) is implemented with a lot of hardware blocks instead of a software code. The reason of this choice is that a lot of time is saved for the computation and the simulation is much faster. The propellers' speed is calculated from its past values and according to the theory presented in chepter3. The linear velocity vector ”dz” is obtained directly from the integral of the linear acceleration vector ”ddz”. The angular velocity vector ”dphi dtheta dpsi” is obtained from the integral of both the angular acceleration vector ”dp dq dr” and itself through the ”angular matrix” transformation.

The linear acceleration vector ” ddz” is composed of two components: the ”linear friction” (depending on the linear velocity) and the product between the ”linear matrix” and the ”U1” command (obtained from the propellers' speed).
The angular acceleration vector ”dp dq dr” is also composed of two components: the ”rot friction” (depending on the angular velocity vector) and the sum of the ”gyro effects” and the ”omega to U” (obtained from both the propellers' speed and the angular velocity vector).

Chapter 6

Experimental results

The platform developed during this thesis is a small-scale helicopter with four rotors in cross configuration. It is very important that both roll and pitch errors are kept low to provide stable flight. In the hovering condition, if one of the two angles are different than zero a longitudinal acceleration occur. This behavior makes difficult to maintain a fixed position without drift.

The yaw stabilization has lower requirements: an error in the yaw angle does not cause any longitudinal acceleration in hovering condition. However the dynamic range is much wider than the roll or pitches one. The yaw can be changed between -180 and +180 degrees while the other two (roll and pitch) shows small variation (less than 10 degrees). Therefore, good performance in both dynamic and static tracking is required.
Figure shows the results of attitude, roll, pitch and yaw.

At low velocities and with small aerodynamic disturbances (for example in indoor flight), Proportional integral-derivative (PID) control is fully sufficient for good tracking of commanded attitude since the vehicle approximates a double-integrator with a first-order lag from the motor dynamics. In translational flight, the pitch and roll dynamics of a quadrotor are very sensitive to rotor blade flapping. The control effort commanded by the PD controller is sufficient to bring the vehicle toward the commanded pitch. As the speed increases, the restoring moments caused by blade flapping increase until the commanded torque is insufficient to hold the vehicle at commanded pitch despite an increase in the pitch error.

It is possible to apply integral control to account for this effect to some extent, although it is important to understand that the integrator accounts for constant biases most effectively, and so eventually compensates for the pitch moment caused by a specific velocity only if the velocity is held constant. The integrator, therefore, will need to adapt each time the vehicle speeds up or slows down.

A linear controller provides attitude control with gain on the vertical acceleration as well as the usual PID terms. In general, the controller has proved to be very effective in altitude control, though performance can be improved by better filtering of the altitude s readings. It must provide strong active damping whenever descent velocity is encountered. Otherwise, altitude oscillations have been observed to occur, due to an apparent drop in thrust during small descent velocities, as predicted by the induced velocity model results. However, with strong damping, this effect has been reduced. By applying feedback control on the vertical acceleration.

Position control is currently implemented using a PID controller design, which actuates the vehicle's roll and pitch as control inputs. Tilting the vehicle in any direction causes a component of the thrust vector to point in that direction, so commanding pitch and roll is directly analogous to commanding accelerations in the X-Y plane.

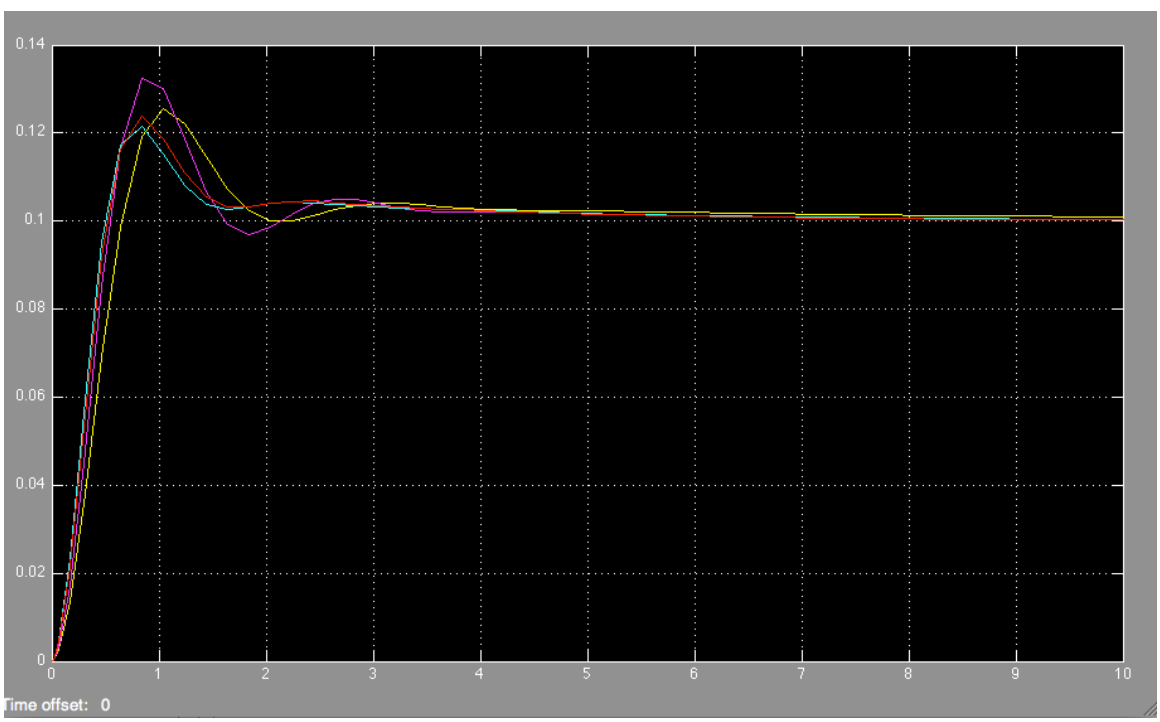

Yellow=Hovering; Purple=Roll; Accent=Pitch; Red =yaw;

Conclusion:

The goals of this thesis work were to model the quadrotor helicopter and to test its control algorithm, thanks also to a simulator. Furthermore these theoretical considerations were taken into account to develop a real platform. The quadrotor model was presented in chapter 3. Two appendices deepened the dynamics and the aerodynamics basics (A and C respectively). In chapter 4 the control algorithm structure was explained. A simulator was adopted to test both dynamics and control, as shown in chapter 5. To develop a real platform, it was necessary to identify the physic constants used in the model.

Quadrotor helicopters are popular as test beds for small UAV development, but their aerodynamics are complex and need to be accurately modeled in order to enable precise trajectory control. Although many good control results have been reported in previous work, these have focused primarily on simple trajectories at low velocities, in controlled indoor environments. In this paper, we have addressed a number of issues observed in quadrotor aircraft operating at higher speeds and in the presence of wind disturbances We have explored the resulting forces and moments applied to the vehicle through these aerodynamic effects and investigated their impact on attitude and altitude control. We have uncovered the extent of their influence using data from static measurements and flight data from the STARMAC II quadrotor. These results have shown that existing models and control techniques are inadequate for accurate trajectory tracking at speed and in uncontrolled environments. Careful consideration of these disturbances will allow us to improve both the physical configuration and control design of the STARMAC II quadrotor, improving attitude and altitude tracking performance and permitting controlled, stable flight at higher velocities and in the presence

According to the goals of this project, the research was very detailed in both modeling and simulation. Thanks also to the identification process. To improve this quadrotor project, a more accurate model of the helicopter can be studied; in particular aerodynamic considerations can help in non-hovering operation. Together with this research, the identification of the real platform physics must be much more accurate.

Several control algorithms can be investigated to find the best trade-off between performance and software complexity. A lot of articles, which focus on quadrotor stabilization algorithm, have been already written. However it would be great to compare

them and find better solutions. Even though the simulator showed already good accuracy and testability, it would be great to be able to simulate the environment too and to use tools, which interact with the real platform.

The low level controller, implemented in this thesis, had the goal of height and attitude stabilization. A high level controller can be connected to the previous one to follow position requirements.

Also there are vast ranges of task that can be developed by using this modal: some of them are as computed by the high level controller, can be obstacle avoidance and trajectory planning. Of course, to improve the locating performance, several sensors must be connected to the platform. A GPS can be used for knowing the global position in an outdoor scenario while a network of IR modules and/or SONARs can be mounted to have information about objects around the quadrotor as well as its position.

A camera can be used not only to determine the position, but also for a lot of other purpose. For example it can be required for the tracking of mobile targets or for environment mapping. In both cases, a camera capable of pan-tilt rotation could achieve better performance. The mechanic structure can be developed to carry a higher payload and a dedicate electronic design can lower the size and weight of the needed circuitry.

Appendix A

Kinematics and Dynamics

This appendix describes the basic equations, which identify a 6 DOF rigid body. The Newton-Euler formulation has been adopted in this work. The quadrotor model can be evaluated according kinematics (first) and dynamics (after) equations:

• Kinematics (section A.1)

• Dynamics (section A.2)

A.1 Kinematics

Kinematics is a branch of mechanics, which studies the motion of a body or a system of bodies without consideration of the forces and torques acting on it. To describe the

motion of a 6 DOF rigid body it is usual to define two reference frames.

• Earth inertial reference (E-frame)

• Body-fixed reference (B-frame)

The E-frame (o_E, x_E, y_E, z_E) is chosen as the inertial right-hand reference. x_E points toward the North, y_E points toward the West, z_E points upwards respect to the earth and o_E is the axis origin. This frame is used to define the linear position (Θ_E [m]) and the angular position (Γ_E [rad]) of the quadrotor.

The B-frame (o_B, x_B, y_B, z_B) is attached to the body. XB points toward the quadrotor front, y_B points toward the quadrotor left, z_E points upwards and o_B is the axis origin. OB is chosen to coincide with the center of the quadrotor cross structure. This reference is

right-hand too. The linear velocity (V_B [m s^{-1}]), the angular velocity (ω_B [rad s^{-1}]), the forces (F_B [N]) and the torques (τ_B [N m]) are defined in this frame.

The linear position Γ_E of the helicopter is determined by the coordinates of the vector between the origin of the B-frame and the origin of the E-frame respect to the E-frame according to equation (A.1).

$$\Gamma^E = [X \;\; Y \;\; Z]^T \qquad (A.1)$$

Figure A.1(Quadrotor frames) shows the two frames and their relation. Quadrotor frames

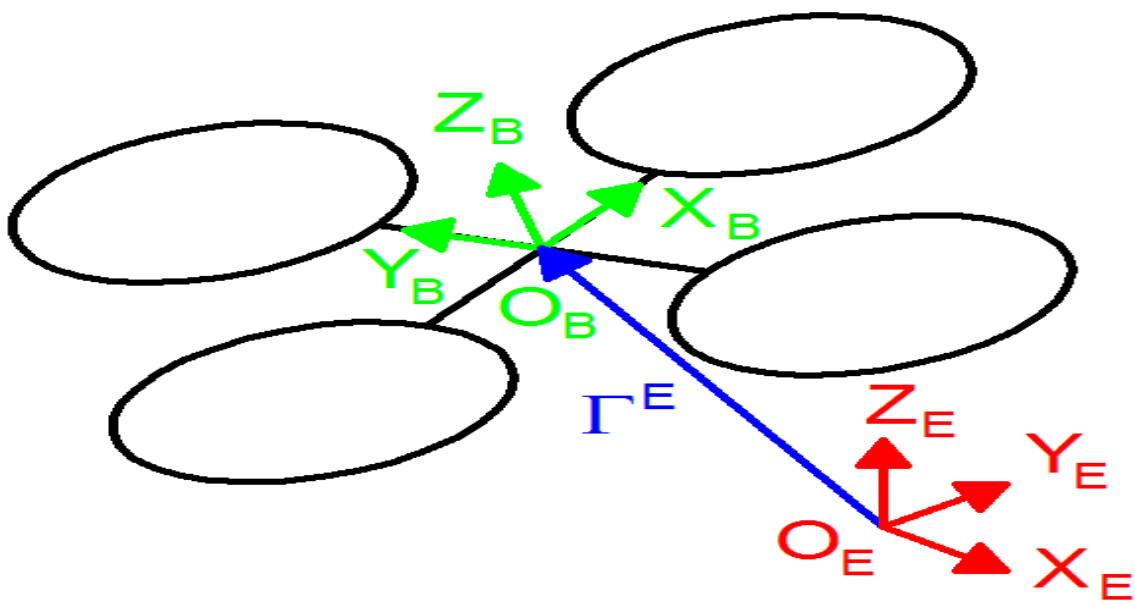

The angular position (or attitude) Θ_E of the helicopter is defined by the orientation of the B-frame respect to the E-frame. This is given by three consecutive rotations about the main axes, which take the E-frame into the B-frame. In this work the ”roll-pitch-yaw” set of Euler angles were used. Equation (A.2) shows the attitude vector.

$$\Theta^E = [\phi \quad \theta \quad \psi]^T \qquad (A.2)$$

The rotation matrix R Θ [−] is obtained by post-multiplying the three basic rotation matrices in the following order:

• Rotation about the z_E axis of the angle ψ (yaw) through R (ψ, z) [−].

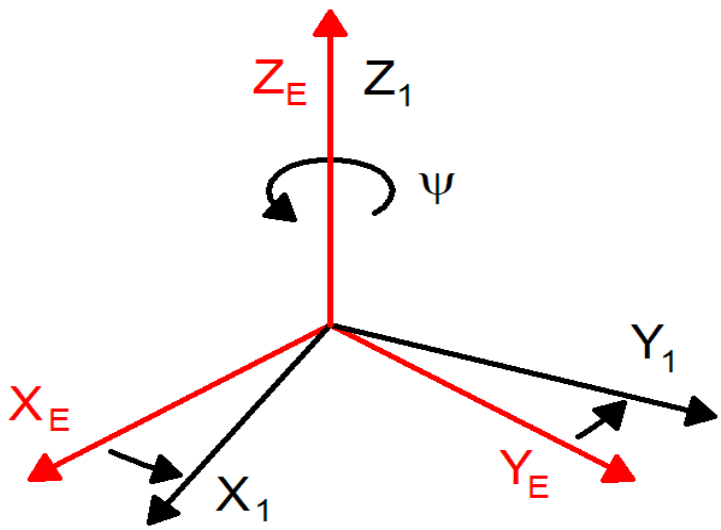

$$R(\psi, z) = \begin{bmatrix} c\psi & -s\psi & 0 \\ s\psi & c_\psi & 0 \\ 0 & 0 & 1 \end{bmatrix} \qquad (A.3)$$

- Rotation about the y_1 axis of the angle θ (pitch) through R (θ, y) [−].

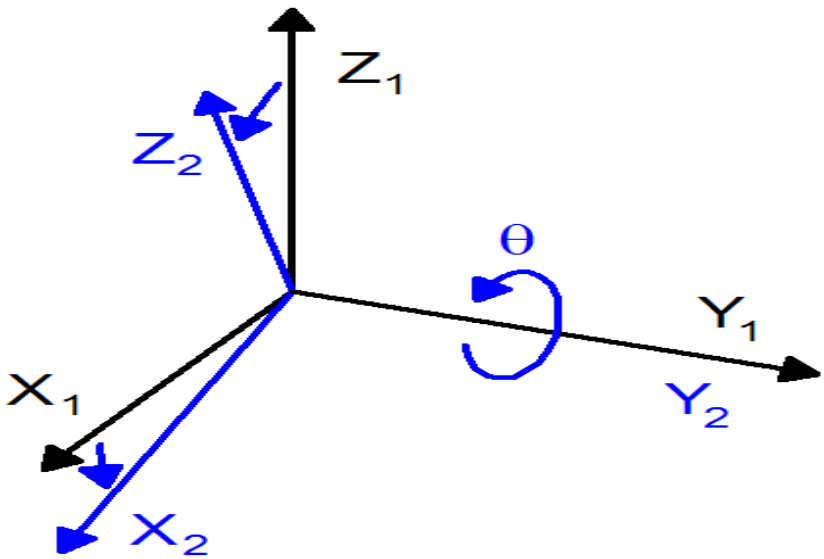

$$R(\theta, y) = \begin{bmatrix} c\theta & 0 & s\theta \\ 0 & 1 & 0 \\ -s\theta & 0 & c\theta \end{bmatrix} \qquad (A.4)$$

• Rotation about the x_2 axis of the angle ϕ (roll) through R (ϕ, x) [−].

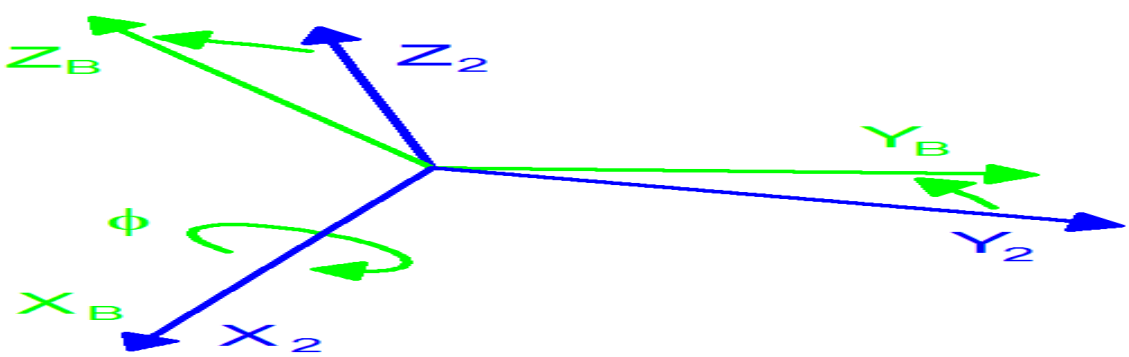

$$R(\phi, x) = \begin{bmatrix} 1 & 0 & 0 \\ 0 & c\phi & -s\phi \\ 0 & s\phi & c\phi \end{bmatrix} \qquad (A.5)$$

In the previous three equations (and in the following), this notation has been adopted: $c_k =$

cos k, s_k = sin k, t_k = tan k. Equation (A.6) shows the composition of the rotating matrix RΘ.

$$R\Theta = R(\psi, z)\, R(\theta, y)\, R(\phi, x) \qquad (A.6)$$

As stated before, the linear V_B and the angular ω_B velocities are expressed in the body-fixed frame. Their compositions are defined according to equations
(A.7) And (A.8).

$$V^B = [u \;\; v \;\; w]^T \qquad (A.7)$$

$$w^B = [p \;\; q \;\; r\,]^T \qquad (A.8)$$

It is possible to combine linear and angular quantities to give a complete representation of the body in the space. Two vectors, can be thus defined: the generalized position ξ [+] and the generalized velocity ν [+], as reported in equations (A.9) and (A.10).

$$\xi = [X \;\; Y \;\; Z \;\; \phi \;\; \theta \;\; \psi]^T \qquad (A.9)$$

$$\nu = [u \;\; v \;\; w \;\; p \;\; q \;\; r\,]^T \qquad (A.10)$$

As for the linear velocity, it is also possible to relate the angular velocity in the earth frame (or Euler rates) $\dot{\Theta}_E$ [rad s^{-1}] to that one in the body-fixed frame w_B thanks to the transfer matrix TΘ [−]. Equations (A.12) and (A.13) show the relation specified above.

$$w^B = T_\Theta^{-1}\dot{\Theta}^E \qquad (A.11)$$

$$\dot{\Theta}^E = T_\Theta w^B \qquad (A.12)$$

It is possible to describe equations (A.11) and (A.12) in just one equivalence which relate the derivate of the generalized position in the earth frame $\dot{\xi}$ [+] to the generalized velocity in the body frame ν. The transformation is possible thanks to the generalized matrix JΘ [−]. In this matrix, the notation $0_{3Å\sim3}$ means a sub-matrix with dimension 3 times 3 filled with all zeros. Equations (A.13) and (A.14) show the relation described

above.

$$\dot{\xi} = J_{\Theta}\, \nu \qquad (A.13)$$

$$J_{\Theta} = \begin{bmatrix} R_{\Theta} & 0_{3x3} \\ 0_{3x3} & T_{\Theta} \end{bmatrix} \qquad (A.14)$$

A.2 Dynamics

Dynamics is a branch of mechanics, which studies the effects of forces and torques on the motion of a body or system of bodies. There are several techniques, which can be used to derive the equations of a rigid body with 6 DOF. The Newton-Euler formulation has been adopted in this work.

The equations of motion are more conveniently formulated in a body-fixed because with this notation.

• The inertia matrix is time-invariant.

• Advantage of body symmetry can be taken to simplify the equations.

• Measurements taken on-board are easily converted to body-fixed frame.

• Control forces are almost always given in body-fixed frame.

The decision to describe the equations of motion in the body-fixed frame trades off complexity in the acceleration terms for relative simplicity in the force terms. Two assumptions have been made in this approach:

• The first one states that the origin of the body-fixed frame o_B is coincident with the center of mass (COM) of the body. Otherwise, another point (COM) should be taken into account and thus considerably complicating the body equations.
• The second one specifies that the axes of t he B-frame coincide with the body principal axes of inertia. In this case the inertia matrix I is diagonal and, once again, the body equations become easier.

From the Euler's first axiom of the Newton's second law follows the derivation of the linear components of the body motion, according to equation (A.15).

$$m\ddot{\Gamma}^E = F^E$$

$$m\,\dot{R}_\Theta \dot{V}^B = R_\Theta F^B$$

$$\mathrm{m}\,(R_\Theta \dot{V}^B + \dot{R}_\Theta V^B) = R_\Theta F^B$$

$$\mathrm{m}\;R_\Theta\,(\,\dot{V}^B + w^B x\, V^B) = R_\Theta F^B$$

$$\mathrm{m}\,(\,\dot{V}^B + w^B \times V^B) = F^B \qquad \text{(A.15)}$$

Equation (A.16) shows the derivation of the angular components of the body motion from the Euler's second axiom of the Newton's second law.

$$\mathrm{I}\;\ddot{\Theta}^E = \tau^E$$

$$\mathrm{I}\,\dot{w}^B + w^B \times (\,I\,w^B\,) = T_\Theta\,\tau^B \qquad \text{(A.16)}$$

In equation (A.16) I [N m s2] is the body inertia matrix (in the body-fixed frame), $\ddot{\Theta}^E$ [rad s–2] is the quadrotor angular acceleration vector WRT E-frame, $\dot{w}^B$ [rad s–2] is the quadrotor angular acceleration vector WRT B-frame and τ E [N m] is the quadrotor torques vector WRT E-frame.

In equation (A.20) I [N m s2] is the body inertia matrix (in the body-fixed frame), $\ddot{\Theta}^E$ [rad s–2] is the quadrotor angular acceleration vector WRT E-frame, $\dot{w}^B$ [rad s–2] is the quadrotor angular acceleration vector WRT B-frame and τ [N m] is the quadrotor torques vector WRT E-frame.
By putting together equations (A.15) and (A.16), it is possible to describe the motion of a 6 DOF rigid body. Equation (A.21) shows a matrix formulation of the dynamics.

$$\begin{bmatrix} m\;I_{3x3} & 0_{3x3} \\ 0_{3x3} & I \end{bmatrix} \begin{bmatrix} \dot{V}^B \\ \dot{w}^B \end{bmatrix} + \begin{bmatrix} w^B \times (mV^B) \\ w^B \times (I\,w^B) \end{bmatrix} = \begin{bmatrix} F^B \\ \tau^B \end{bmatrix} \qquad \text{(A.17)}$$

Where the notation I3Å~3 means an identity matrix with dimension 3 times 3. In addition, it's easy to see that the first matrix in equation (A.17) is diagonal and constant. This equation is totally generic and is valid for all the rigid body, which obey to the hypothesis (or simplifications) previously done. However, it was used in this work to model the quadrotor helicopter, hence the last vector contains specific information about its dynamics. Chapter 3 provides the derivation of the specific dynamic model taking into account the forces and torques in play.

Appendix B

Acronyms and abbreviations

Acronym	Description
AC	Alternated current
ADC	Analog to Digital Converter
BEMF	Back Electro-Motive Force
BET	Blade Element Theory
BSC	BaSiC
BSPI	Buffered Serial Peripheral Interfaces
CAN	Controller Area Network
COM	Center Of Mass
CPU	Central Processing Unit
DAT	DATA sheet
DC	Direct Current
DMA	Direct Memory Access
DOF	Degrees Of Freedom
DSP	Digital Signal Processor
MOSFET	Metal-Oxide-Semiconductor Field-Effect Transistor

Appendix C
List of constants

Symbol	Unit	Value	Description
d	N m s^2	1.1×10^{-6}	drag factor
g	m s^{-2}	9.81	acceleration due to gravity
l	m	0.24	center of quadrotor to center of propeller distance
m	kg	1	mass of quadrotor
A	m^2	75.5×10^{-3}	propeller area
C_D	_	0.05	drag coefficient
Ixx	N m s^2	8.1×10^{-3}	body moment inertia around x-axis
Iyy	N m s^2	8.1×10^{-3}	body moment inertia around y-axis
Izz	N m s^2	14.2×10^{-3}	body moment inertia around z-axis
Rr	m	8.5×10^{-3}	rotor radius
Ap	rads^{-1}	-22.7	linearized propeller's speed coefficient.

References:

- Control Theory and Designs by PATRIZIO COLANERI (Milan Politecnico), JOSE C.GEROMEL (University of Campinas , Brazil).

- Adoptive Control (2ND edition) by KARL J. ASTROM & BJORN WITTENMARL.

- Modern Control System solution Manual by RICHARD C. DORF (University of California) & ROBERT H. BISHOP (University of Texas).

- L. BEJI K. M. ZEMALACHE and H. MARREF. Control of an under-actuated system: Application to a four rotors rotorcraft. IEEE International Conference on Robotics and Biomimetic, pages 404 – 409, 2005.

- P. MURREIRI S. BOUABDALLAH and R. SIEGWART. Design and control of an indoor micro quadrotor.

- M. ACHTELIK K. M. DOTH G. HIRZINGER D. GURDAN, J. STUMPF and D. RUS. Energy-efficient autonomous four-rotor flying robot controlled at 1 kHz. IEEE International Conference on Robotics and Automation, pages 361 – 366, 2007.

- Modeling & Simulink references : http://ctms.engin.umich.edu/

- Transfer Function and modeling : http://www.scribd.com/