MUSEUM

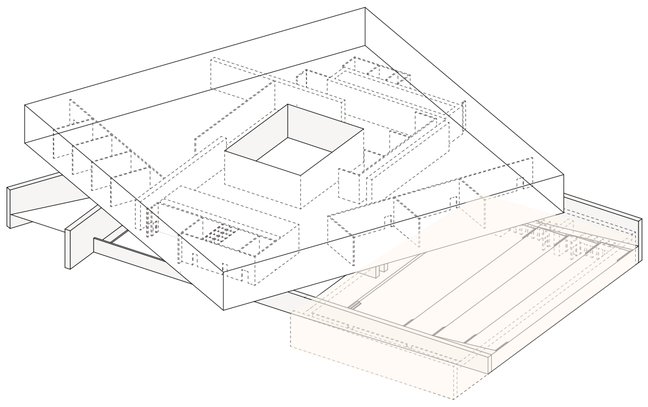

Air change due to UNI 10339

Function	Area (m2)	Expected crowding factor (f)	l/s each person	vol/h	A*f		Air change
Exhibition	1120	0,3		6		336	7257,6
Restrooms	65				8		304
						TOTAL=	7561,6

Ducts and provided devices

	AIRCAR MA10 Q150	AIRCAR MA10 Q200	Q max
Duct A	0	9	1890,4
Duct B	2	8	1890,4
Duct C	0	9	1890,4
Duct D	0	9	1890,4

Ducts sections:

Equ Circular section:

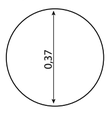

Equ. rectangular section:

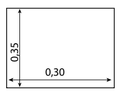

DUCTS SIZING:

Q	7561,6	m3/h	Airflow
Q	2,10	m3/s	
w=	9,0	m/s	Speed
A	0,23	m2	Section
Rectangular section duct:			
h	0,50	m	h dimension
L	0,47	m	b dimension
Equ. circular section duct:			
D	0,545	m	hydraulic dim. Equ
Dce=	0,528	m	circular dim. Equ
4 main ducts			
Q	1890,4	m3/h	Airflow
Q	0,53	m3/s	
w=	5	m/s	Speed
A	0,11	m2	Section
rectangular section duct:			
h	0,35		h dimension
L	0,30		b dimension
Equ. circular section duct:			
D	0,366	m	hydraulic dim. Equ
Dce=	0,354	m	circular dim. Equ

VENTILATION DUCTS LAYOUT

PLAN - 5,50 m 1:500

0 5 10 20 m

AIR SUPPLY

AIR EXTRACTION

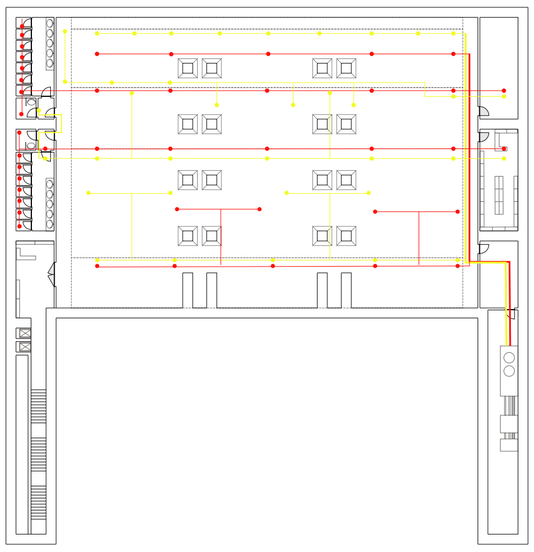

WATER SYSTEMS - WASTE WATER DRAINAGE SYSTEM

EN UNI 12056-2

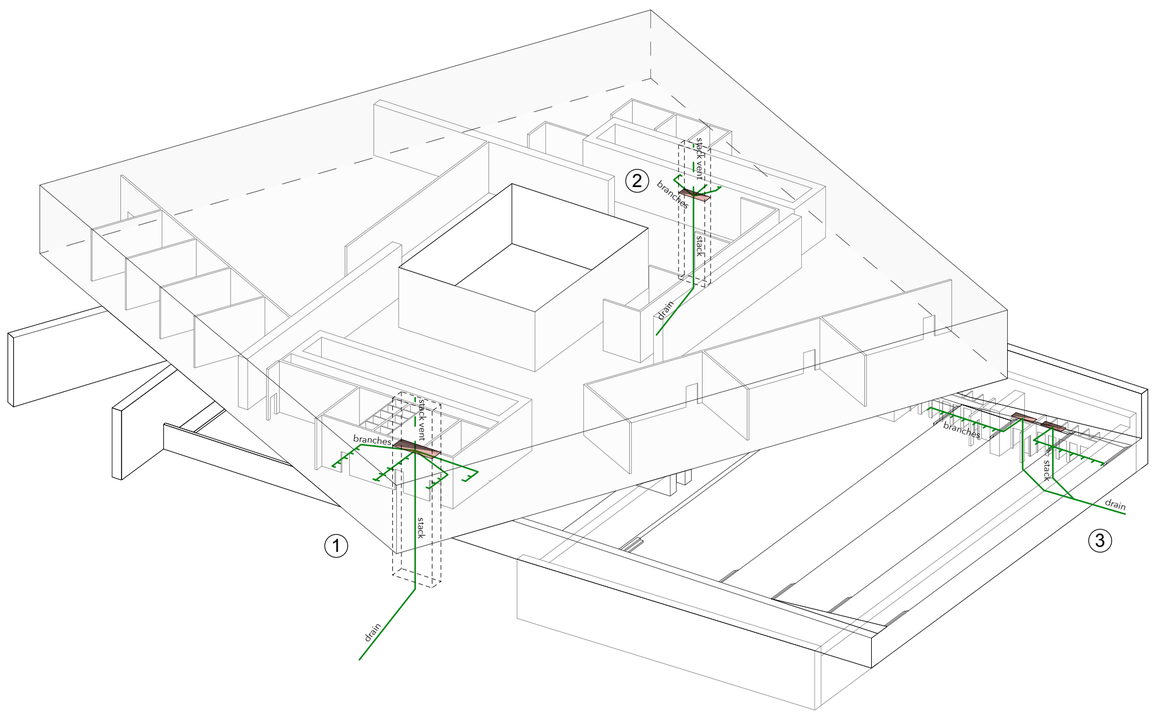

WASTE WATER DRAINAGE SYSTEM:
System II

VENTILATION SYSTEM CONFIGURATION:
Primary ventilated system configurations

DRAINAGE BRANCHES TYPE:
Ventilated discharge branch configurations

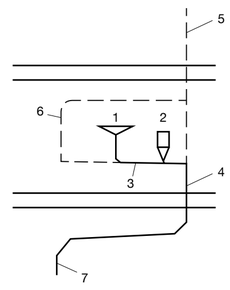

1 wash basin
2 wc
3 branch discharge pipe
4 stack
5 stack vent
6 branch ventilating pipe
7 drain

PIPES DIMENSIONS	1	2	3
Ventilated discharge branches Branch/Vent (DN)	60/30	50/30	60/30
Primary ventilated discharge stacks Stack and Stack Vent (DN)	80	70	70

WATER SUPPLY

EN UNI 806-3

System with bottom-up water supply and hot water preparation at bottom level

1 supply
2 recirculation

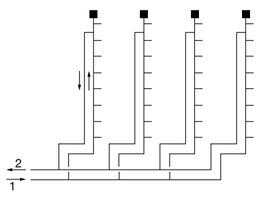

1. Calculation of Library toilet facilities
   18 LU (1,8 l/s) — DN 26
2. Calculation of Cafe toilet and kitchen facilities
   10 LU (1 l/s) — DN 20
3. Calculation of Museum toilet facilities
   30 LU (3 l/s) — DN 32

1

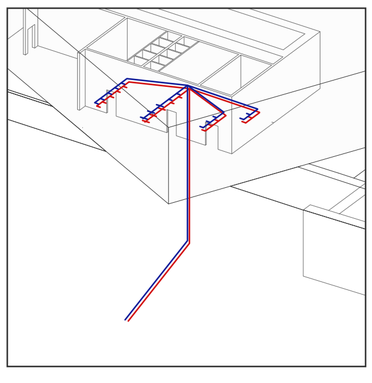

2

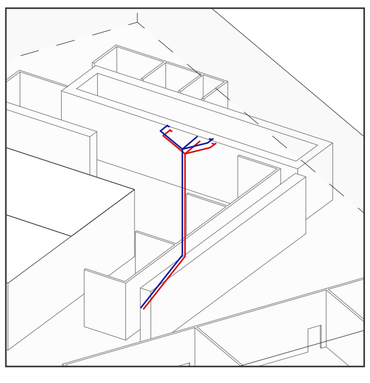

3

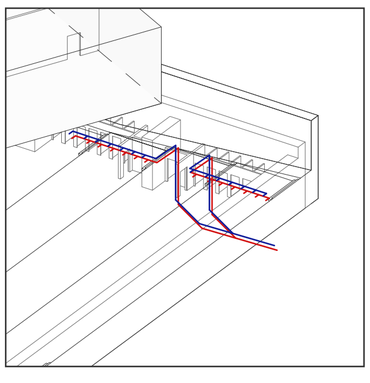

RAINWATER DRAINAGE SYSTEM

EN UNI 12056-2

AVERAGE PRECIPITATION

Precipitation in Aleppo amounts to 330 mm per year, and occurs between October and May, but it's moderate only in winter, while it never rains from June to September. During winter, from December to February or early March, cold spells, lasting a few days, with snow and frost, may occur. During some years, the rains from December to March can be abundant.

Month	Jan	Feb	Mar	Apr	May	Jun	Jul	Aug	Sep	Oct	Nov	Dec	Year
Prec.(mm)	60	50	45	35	20	2	0	0	2	20	35	60	330
Days	13	14	10	7	4	1	0	0	1	4	7	11	72

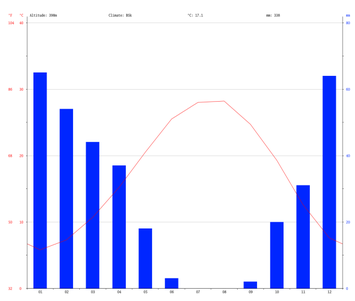

Channel type *10x10 cm*

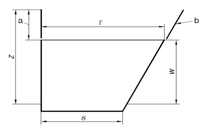

Vertical pipe choice

Pipe DN	*100*
Number of pipes	*4*
Distance between pipes	*29,4 m*

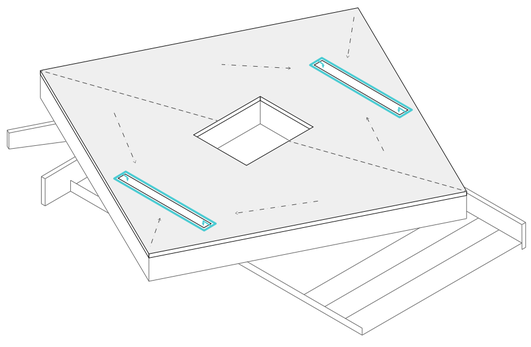

Politecnico di Milano 2018/2019
School of Architecture Urban Planning Construction Engineering
MSc in Architecture - Building Architecture
Master Thesis
Supervisor: Prof. M. G. Folli

Aleppo Cultural Center

Lorenzo Maria De Vecchi 897579
Nicolò Sciolti 897097
Vittorio Vaghi 897169